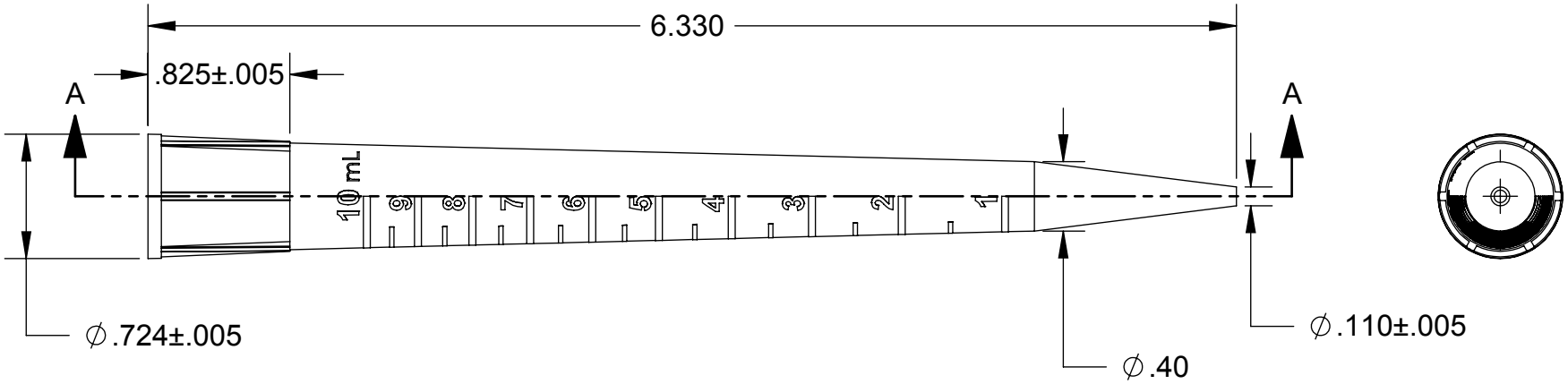


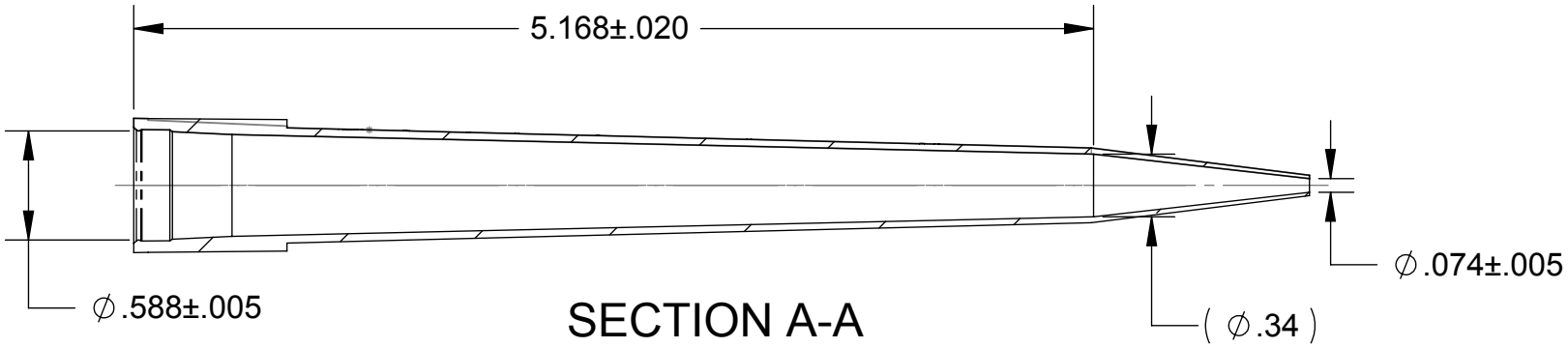


SECTION A-A

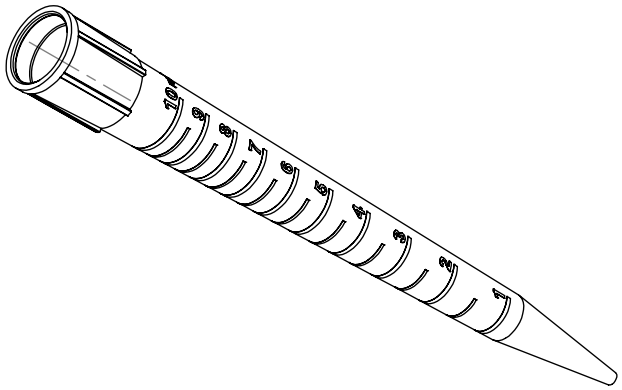

| | | |
|---|---|---|
| UNLESS OTHERWISE SPECIFIED DIMENSIONS ARE IN INCHES TOLERANCES ARE: FRACTIONS ±1/64, DECIMALS .XX ± .01, .XXX ± .001, .XXXX ± .0005, ANGLES ± 0.1 | CAD GENERATED DRAWING, DO NOT MANUALLY UPDATE | |
| MATERIAL | APPROVALS | DATE |
| FINISH | DRAWN JWALLS | 3/27/08 |
| DO NOT SCALE DRAWING | CHECKED | |
| | RESP ENG | |
| | MFG ENG | |
| | QUAL ENG | |


SSI Scientific Specialties Inc.
1310 Thurman Street
Lodi CA, 95240
Ph: (209) 333-2120
Fx: (209) 333-8623
info@scientificspecialties.com


# 4530-00
# PIPETTE TIP, 10mL

| | | | |
|---|---|---|---|
| SIZE A | SHRINK RATE | | REV. -- |
| SCALE 3:1 | JOB NO. | SHEET 2 OF 2 | PRINTED 10/6/2009 |