REV.	DESCRIPTION	DATE	DRAWN BY	APPROVED

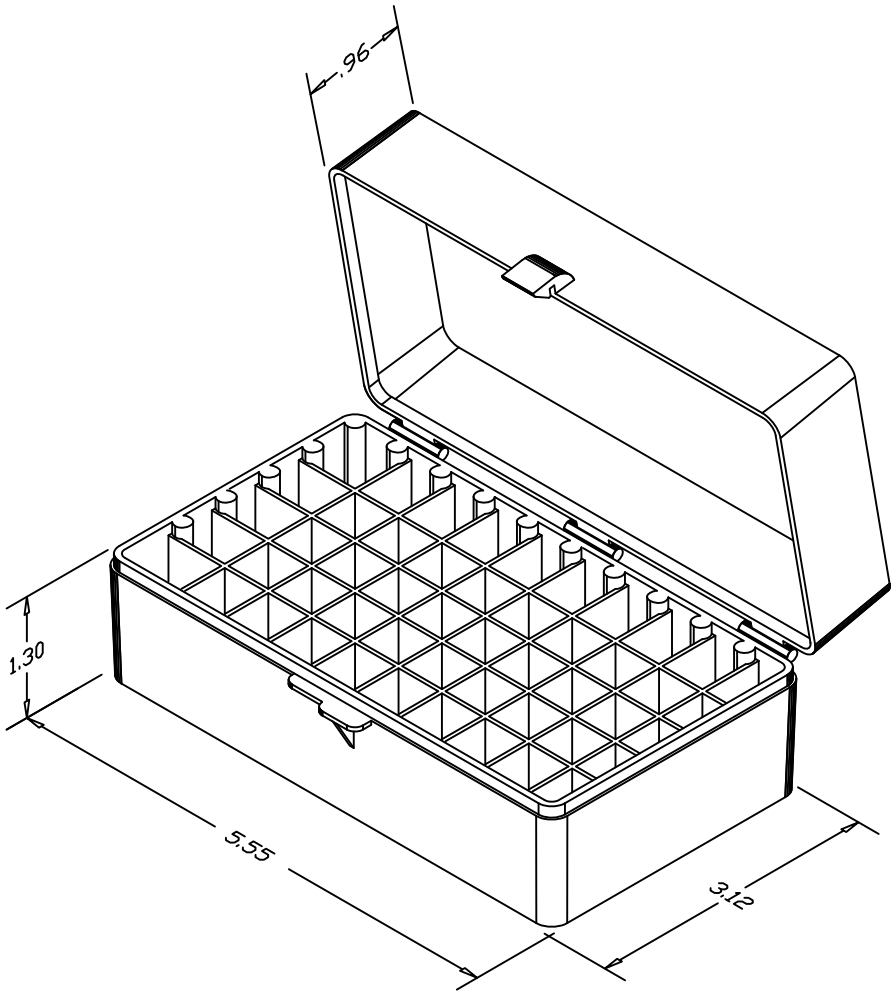

UNLESS OTHERWISE SPECIFIED
DIMENSIONS ARE IN INCHES
TOLERANCES ARE:

FRACTIONS	DECIMALS	ANGLES
±1/64	.XX ± .01	± 0.1
	.XXX ± .001	
	.XXXX ± .0005	

MATERIAL

FINISH

DO NOT SCALE DRAWING

CAD GENERATED DRAWING,
DO NOT MANUALLY UPDATE

APPROVALS	DATE
DRAWN JWALLS	9-17-09
CHECKED	
RESP ENG	
MFG ENG	
QUAL ENG	

Scientific Specialties Inc.
1310 Thurman Street
Lodi CA, 95240
Ph: (209) 333-2120
Fx: (209) 333-8623
info@scientificspecialties.com

5510

SIZE	SHRINK RATE	REV.
A		
SCALE	JOB NO.	SHEET 1 OF 1

FILE: Draw3